REVISION					
ZONE	REV	FROM	TO	DATE	APPROVED

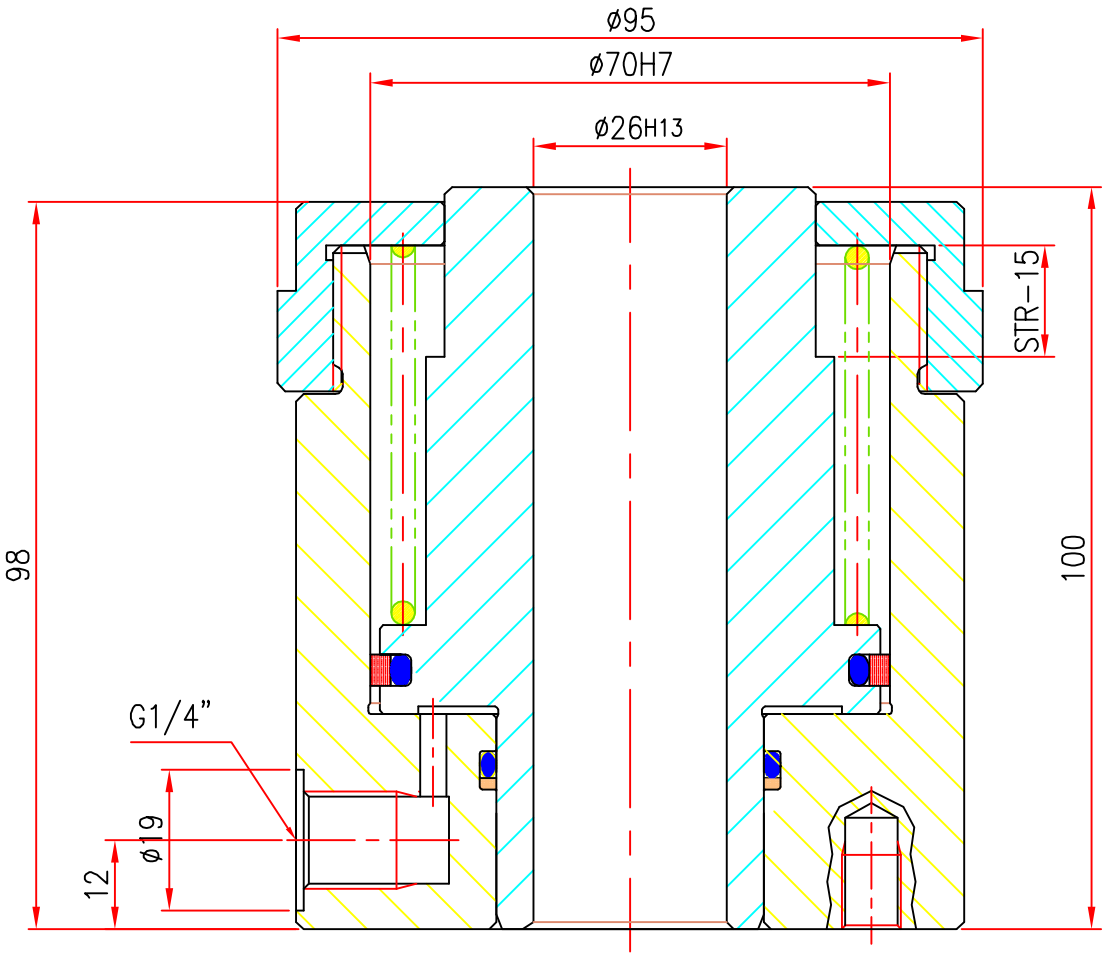

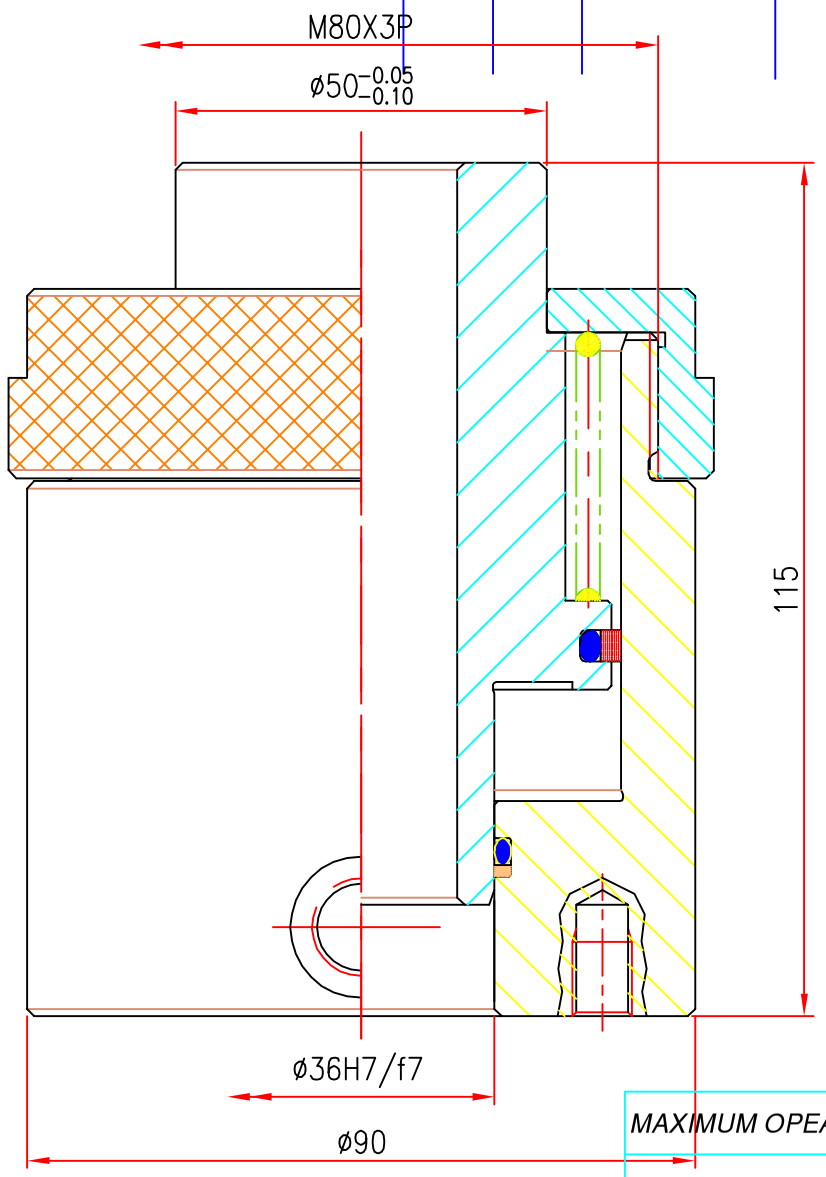

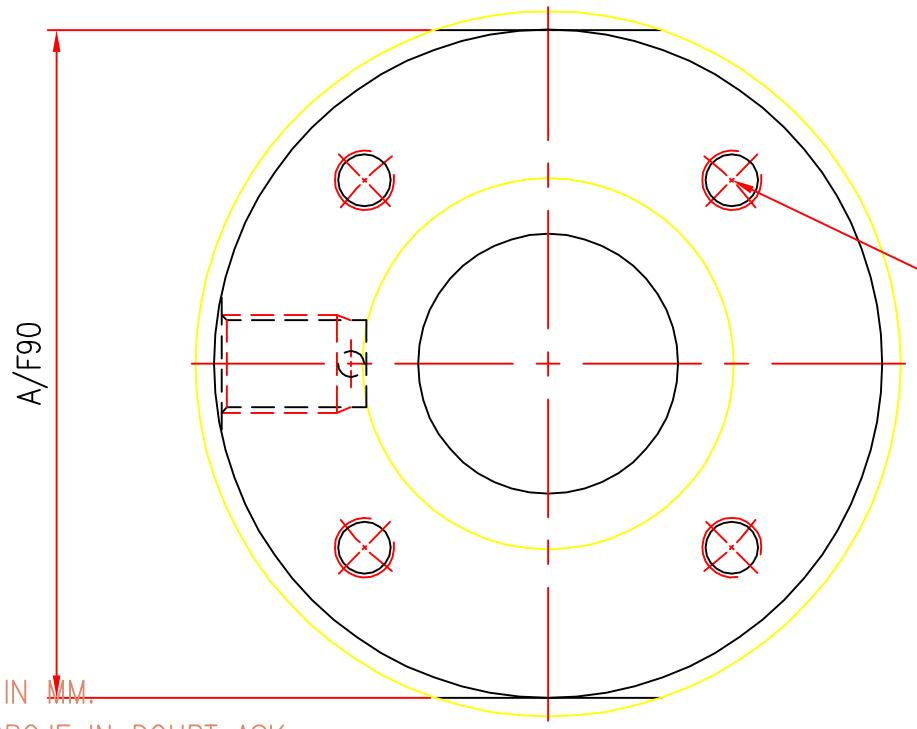

M8(X4) Equi Spaced
AS SHOWN ON PCD-70
TAP DEEP-10
DRILL DEEP-14

MAXIMUM OPEARATING PRESSURE	200 BAR
MINIMUM OPEARATING PRESSURE	10 BAR
STROKE	15 mm
DISPLACEMENT IN CC	28.3 cc
Eff PISTON AREA	42.5 sq.cm

SURFACE FINISH												
Ra value µm	0.025	0.05	0.1	0.2	0.4	0.8	1.6	3.2	6.3	12.5	25	50	100

GENERAL TOLERANCES WHERE NOT SPECIFIED

LINEAR – LENGTH OR DIAMETER						ANGULAR–LENGTH IN MM OF SHORT SIDE OF ∠			
0.5–6	6–30	30–120	120–315	315–1000	1000–2000	UPTO 6	6–30	30–120	120–400
±0.1	±0.2	±0.3	±0.5	±0.8	±1.2	±1°	±30'	±20'	±10'

QUICLOC PVT LTD
B'lore - 70

SCALE: 1:1	–	TITLE: HOLLOW PISTON CYLINDER SINGLE ACTING–COMPACT SERIES
MATERIAL:	SHEET NO: 1 OF: 1	
GROUP NO: –		
SUPERCEDED BY –	REPLACES –	
DRAWING NO: A42203		

	NAME	DATE
DESIGN	TIRUMAL	01-11-05
DRAWN	TIRUMAL	24-11-05
CHECKED		
APPROVED		

MACHINE TYPE: HOLLOW PISTON CYL

CUSTOMER: –

1.0 GENERAL

1.1 ALL DIMENSIONS ARE IN MM.
1.2 DO NOT SCALE THE DRG.IF IN DOUBT ASK.
1.3 ROUND OF THE UNSPECIFIED EDGES.
1.4 DEBURR ALL OVER.

SHEET FORMATS-1,FORMAT NO: F-8-DGN-09 DT.01-11-05 Rew No-00-A3